ST-30C,30MA,30MPL

STACKING ASSEMBLY INSTRUCTIONS

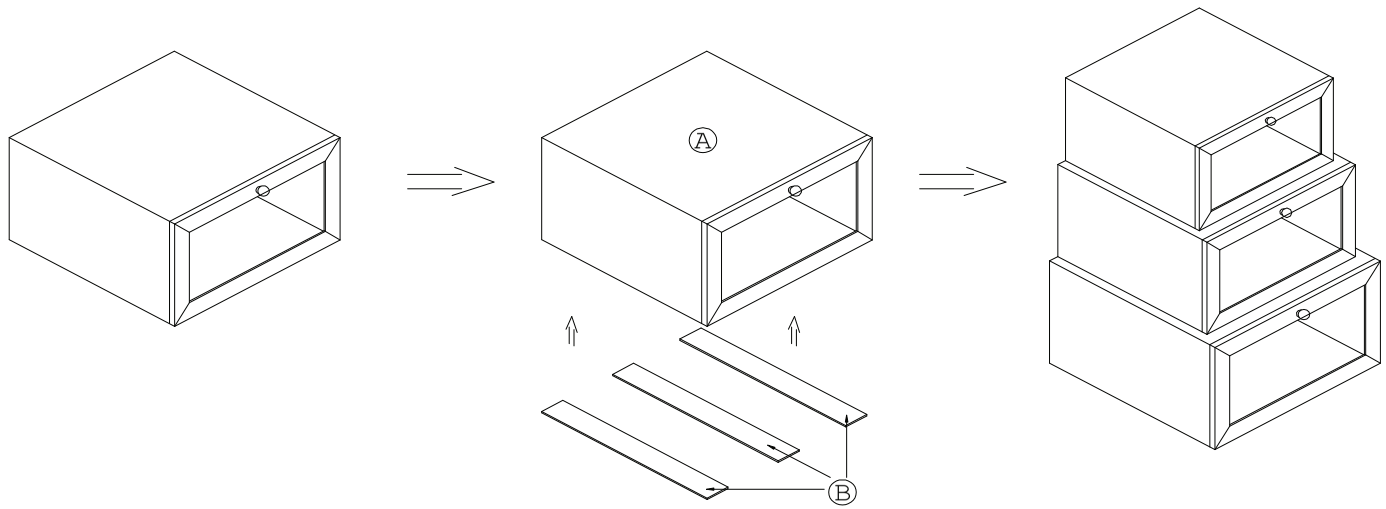

A	B
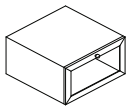 BOX-1PC	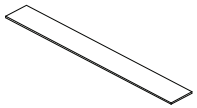 NON-SLIP PASTER BAR-3PCS

ST-20C,20MA,20MPL

STACKING ASSEMBLY INSTRUCTIONS

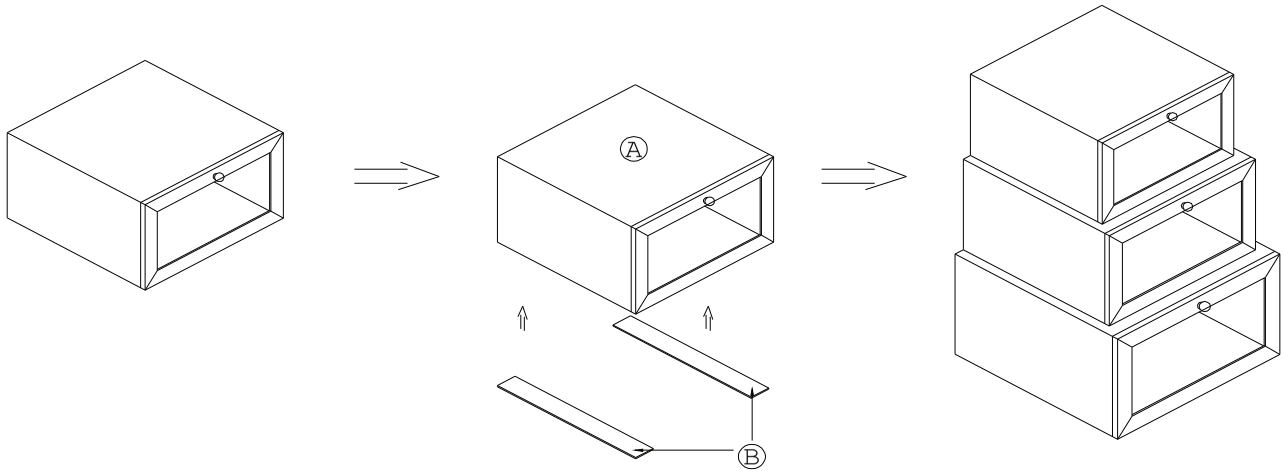

A	B
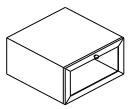 BOX-1PC	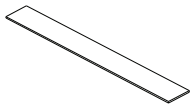 NON-SLIP PASTER BAR-2PCS

ST-10C,10MA,10MPL

STACKING ASSEMBLY INSTRUCTIONS

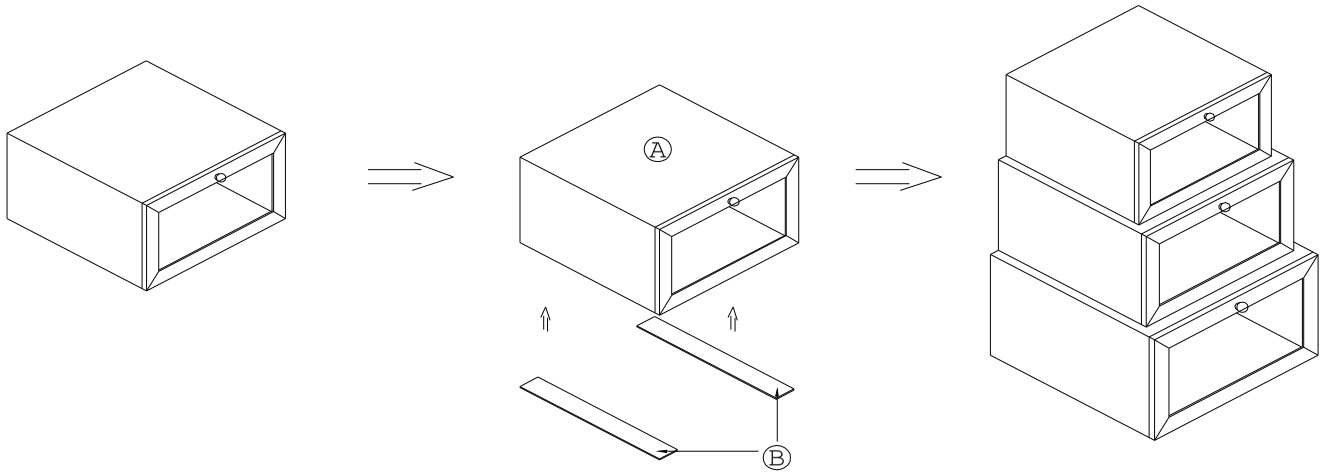

A	B
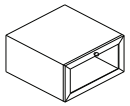	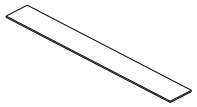
BOX-1PC	NON-SLIP PASTER BAR-2PCS